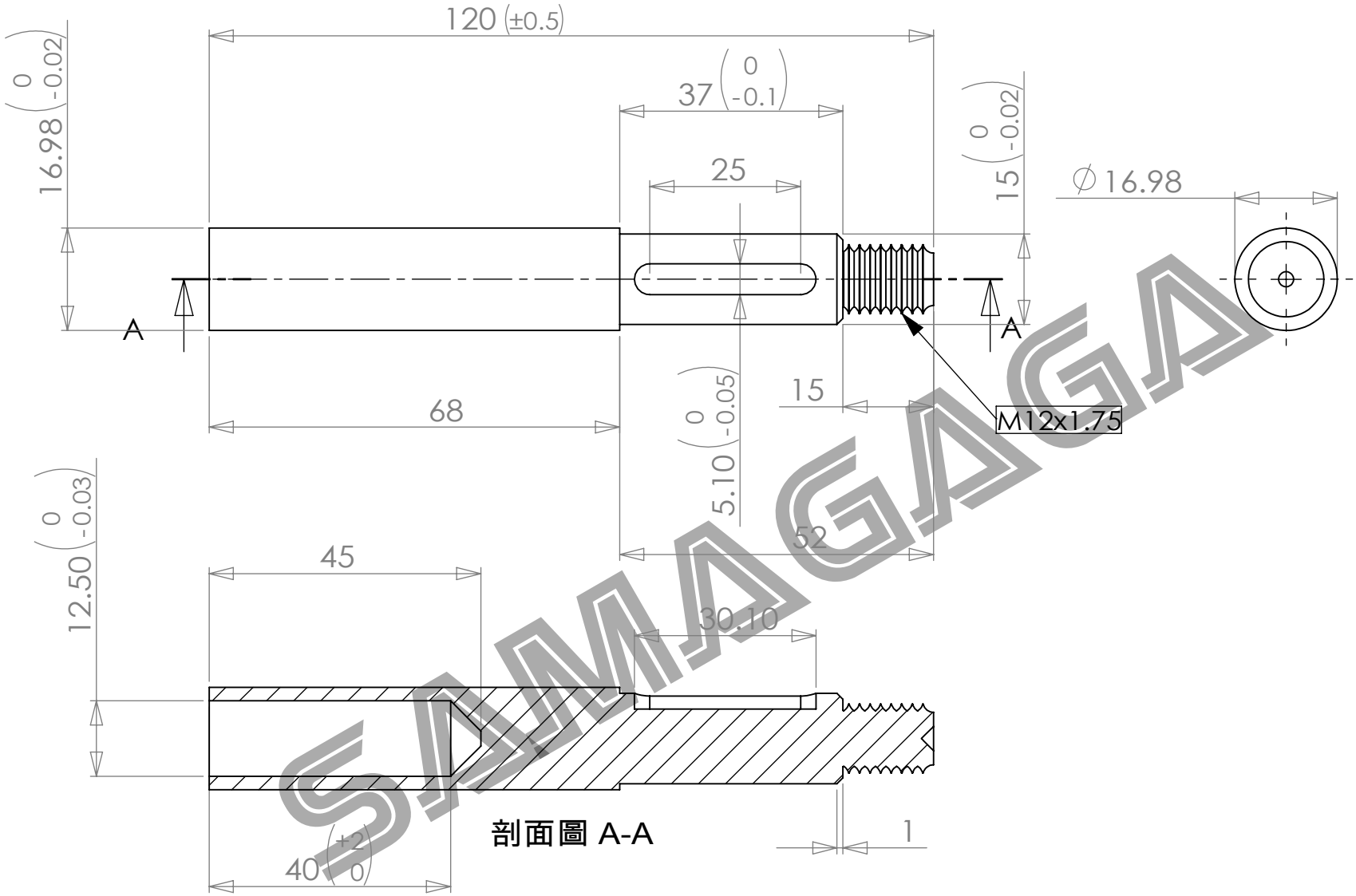

SAMAGAGA

AXLE-EX-A

材質=SCM4140

U-MOUTH